Name: _____ Period: _____ 6th OL Math 5/10 THURS

RACE TO THE STAAR DAY 8

6.2E

1 Five brothers equally shared 3 boxes of snack crackers. Which equation represents the part of the boxes that each brother received?

F $\frac{5}{3} = 1\frac{2}{3}$

G $\frac{5}{3} = 1.6$

H $\frac{3}{5} = 0.6$

J $\frac{3}{5} = 0.\overline{6}$

6.4C

2 The ratio of boys to girls in the school musical is 5 to 8. Which of the following shows the possible numbers of boys and girls in the school musical?

A 30 girls and 48 boys

B 15 boys and 18 girls

C 20 boys and 32 girls

D Not here

6.7B

3 Which of the following represents an expression?

I. Four years less than Tiffany's age
II. The sum of a number and six
III. Tim has $30 more than Jeremy
IV. The difference of seven and three

F II only

G I and II only

H III only

J I, II, and IV only

6.7A

4 The expression below is equivalent to which integer?

$$2\,(-57 \div 3) + 20^2 - 5$$

A 357

B 433

C -3

D Not here

6.6A

5 Samuel uses the equation $y = \frac{2}{5}x$ to create the table of values shown below.

X	1	2	3	4
Y	0.4	0.8	1.2	1.8

Which dependent quantity from the table is incorrect?

Record your answer and fill in the bubbles on the grid below. Be sure to use the correct place value.

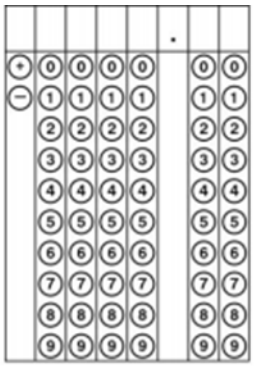

6.6B

6 Abbigail uses the table to calculate the cost for her babysitting services.

Babysitting

Number of hours (h)	Cost (c)
2	$17.00
3	$25.50
4	$34.00
5	$42.50

Which equation correctly represents the relationship between the independent and dependent quantities?

A c = h + 8.5

B h = 8.5c

C c = 8.5h

D $h = \frac{8.5}{c}$

6.8D

7 The Pet Palace is replacing its dog training arena with a new arena with dimensions that are twice as large. The old arena is shown below.

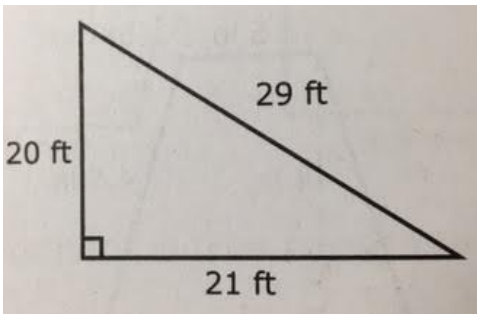

How much greater is the area of the new arena compared to the area of the old arena?

A 630 square feet

B 210 square feet

C 1,260 square feet

D 840 square feet

6.8D

8 Alex uses storage containers like the one shown below to organize the garage. If the volume of a storage container is 6,720 cubic inches, what is the height of the container?

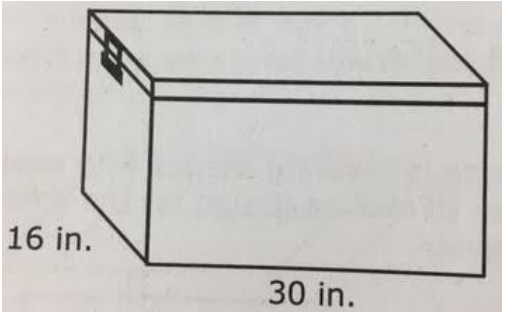

F 12 inches

G 13 inches

H 14 inches

J 15 inches

6.12C

9 Raul and Bryan each recorded the number of hours they slept last week. The data is shown below.

Raul's Sleep Log

8.5 8 9.5 9 8.5 7.5 8.5

Bryan's Sleep Log

6.5 7 7.5 6.5 12 7 7.5

Which statement is NOT true about the data provided?

A Both sets of data have an interquartile range of 1.

B Both measures of center for Raul's data have a value of 8.5.

C The shapes of both data distributions are non-symmetric.

D The IQR of Bryan's data is best used to describe the spread because of the outlier